Robust Optimal Gain Scheduling Controller for Nuclear Reactors

Mehrdad. n. khajavi,[1] Golamhassan Paygane,[1] Mohammad Bagher. Menhaj[2]
1- Assistant Prof Shahid Rajaei University Tehran Iran
2- Associate Prof. School of computer and electrical engineering, Oklahoma State University Oklahoma, U.S.A

ABSTRACT:

Nuclear power reactors are, in nature nonlinear and time varying. These characteristics must be considered, if large power variations occur in their working regime. In this paper a robust optimal gain scheduling controller for regulating the power of a nuclear reactor has been designed and simulated. The proposed controller is capable of regulating power levels in a wide power range (10% to 100% power levels). The controller achieves a fast and good transient response. The simulation results show that the proposed controller outperforms the fixed optimal control recently cited in the literature for nuclear power plants.

Key words: Modeling and control, Nuclear Reactors, Gain Scheduling, Optimal Control, Robust Control

[Downloaded from necjournals.ir on 2026-11-26]

1. INTRODUCTION

Power plants usually work at different working regimes, such as: Base Load, Intermediate Load, and Peak Load. Steam power plants usually work in Base Load. Gas turbine power plants and Hydro power plants, which are capable of attaining their maximum power from zero power in a short period of time, usually supply intermediate and peak power loads. Nuclear power plants, because of their safety and control limitations, usually will be placed in the first group (namely Base Load). Nowadays with increasing the number of Nuclear power plants and their more contributions of supplying electrical energy, the need of load following capability of these power plants have become more apparent.

Nuclear reactors are in nature nonlinear and their parameters vary with time as a function of power, fuel burn up and control rod worth. Therefore, these characteristics must be considered if large power variations occur in their working regimes.

The design of controller for a nuclear power plant and its robustness to process and measurement noise for 10% variation of reactor power about nominal power (100%) has been reported [1]. Edwards and his colleagues in a series of papers [2-4], with the aid of SFAC (State Feedback Assisted Classical Control) concept have designed different controllers (optimal and fuzzy) for TMI (Three Mile Island) reactor. In [2] power variations have been limited to 10%. However, in [4], nonlinear model of reactor has been linearized for a specific operating point and power variations range, have been increased stepwise from 10% to 75%. Edwards in [3] demonstrated improved robustness characteristics of SFAC control technique to cope with changes of reactor parameters over that of CSFC (Conventional State Feedback Control). In [4] a fuzzy controller based on a fixed gain optimal controller has been designed and simulated.

It must be emphasized that the reactor system equations are both nonlinear and time varying. However, in [4] variations of reactor parameters with power level has not been simulated and is kept fixed at the state of initial equilibrium. The proposed technique in this paper employs the same structures given in [2] and [3]. However, to have a more realistic model of the actual process in this paper reactor parameters, which are functions of power level, are calculated at every instant of time and updated in the simulation at the same time instant. Consequently, whenever the parameters of the reactor change, optimal feedback and feed forward gains are calculated and updated in the simulation. We call our technique as Robust Optimal Gain Scheduling.Controller (ROGSC).

The verification testing of the proposed method is conducted via simulation where the simulation model of the plant is that of a validated model of a PWR-type TMI nuclear power plant reactor [3]. In section 2 the equations governing reactor are explained. Section 3 describes the proposed robust optimal gain scheduling controller. In section 4, the simulation results are presented. Conclusions are given in section 5.

[Downloaded from necjournals.ir on 2026-11-26]

2- Nuclear Reactor Model

A fifth order nonlinear model, with one delayed neutron group and two thermal feedback mechanism [3,4], is the basis of designing a self tuning regulator for controlling power level of a PWR reactor. Point-kinetic equations are assumed for reactor neutronics. The governing equations are as follows

(1) $$\frac{dn}{dt} = \frac{\delta\rho - \beta}{\Lambda} n + \lambda c$$

and

(2) $$\frac{dc}{dt} = \frac{\beta}{\Lambda} n - \lambda c$$

where,

$n \equiv$ *neutron density* (n/cm^3),

$c \equiv$ (neutron) precursor density $(atom/cm^3)$,

$\lambda \equiv$ effective precursor radioactive decay constant (s^{-1}) chosen to match the one group reactor transfer function to a six delayed neutron group transfer function as closely as possible[5],

$\Lambda \equiv$ effective prompt neutron lifetime (s),

$\beta \equiv$ fraction of delayed fission neutrons,

$k \equiv k_{eff} \equiv$ effective neutron multiplication factor,

$\delta\rho \equiv \frac{k-1}{k} \equiv$ reactivity (since $k \approx 1.000$, $\delta\rho \approx k-1$; at steady state $k = 1$, $\delta\rho = 0$).

For computational purposes, we will use equivalent normalized versions of Eqs (1) and (2):

(3) $$\frac{dn_r}{dt} = \frac{\delta\rho - \beta}{\Lambda} n_r + \frac{\beta}{\Lambda} c_r$$

and

(4) $$\frac{dc_r}{dt} = \lambda n_r - \lambda c_r$$

where,

$n_0 \equiv$ initial equilibrium(steady-state) neutron density,

$c_0 \equiv$ initial equilibrium(steady-state) precursor density,

$n_r \equiv n/n_0$, neutron density relative to equilibrium density,

$c_r \equiv c/c_0$, precursor density relative to initial equilibrium density.

Reactor temperatures vary as a function of power generation and heat transfer from (or to) the system. Using normalized point-kinetics equations for n_r, reactor power can be represented as

(5) $P_a(t) = P_{0a} n_r(t) \equiv$ reactor power at time t (MW)

[Downloaded from necjournals.ir on 2026-11-26]

and

$P_{0a} \equiv$ initial equilibrium power level (MW)

The power P and power demand P_d used in the block diagrams are assumed to be relative to the initial equilibrium power (i.e., $P = P_a / P_{0a}$) and are therefore equal to n_r. The following thermal-hydraulic model represents a two-temperature feedback mechanism for a PWR.

(6) $$P_c(t) = \Omega(T_f - T_c)$$

and

(7) $$P_e(t) = M(T_l - T_e)$$

where,

$P_c \equiv$ power transferred from fuel to coolant (MW),

$P_e \equiv$ power removed from the coolant (MW),

$\Omega \equiv$ heat transfer coefficient between fuel and coolant $(MW/^\circ C)$

$M \equiv$ mass flow rate times heat capacity of the water $(MW/^\circ C)$

$T_f \equiv$ average reactor temperature $(^\circ C)$

$T_l \equiv$ temperature of the water leaving the reactor $(^\circ C)$

$T_e \equiv$ temperature of the water entering the reactor $(^\circ C)$

$T_c \equiv$ average reactor coolant(water) temperature $(T_l + T_e)/2$.

The differential equations for the lumped fuel and coolant temperature are as follows:

(8) $$f_f P_a(t) = \mu_f \frac{dT_f}{dt} + P_c(t)$$

and

(9) $$(1 - f_f)P_a(t) + P_c(t) = \mu_c(t)\frac{dT_l}{dt} + P_c(t)$$

where

$f_f \equiv$ fraction of reactor power deposited in the fuel,

$\mu_f \equiv$ total heat capacity of the fuel and structural material; $W_f C_f \equiv$ weight of fuel times specific heat $(MW.s/^\circ C)$,

$\mu_c \equiv$ total heat capacity of the reactor coolant; $W_c C_c \equiv$ weight of the coolant times specific

heat of the coolant $(MW.s/^\circ C)$.

Reactivity input and feedback to the point-kinetics equations are represented by

(10) $$\frac{d\delta\rho_r}{dt} = G_r z_r$$

and

(11) $$\delta\rho = \delta\rho_r + \alpha_f(T_f - T_{f0}) + \alpha_c(T_c - T_{c0})$$

[Downloaded from necjournals.ir on 2026-11-26]

where,

$\delta\rho_r \equiv$ reactivity due to the control rod,

$z_r \equiv$ control input, control rod speed(fraction of core length per second),

$G_r \equiv$ reactivity worth of the rod per unit length(with rod speed in units of fraction of core

length per second, G_r is the total reactivity of the rod),

$\alpha_f \equiv$ fuel temperature reactivity coefficient,

$\alpha_c \equiv$ coolant temperature reactivity coefficient,

$T_{f0} \equiv$ initial equilibrium(steady-state) fuel temperature,

$T_{c0} \equiv$ initial equilibrium(steady-state) coolant temperature.

Linearization of equations (3) through (11) about nominal working point n_r results in the following state-space representation of the reactor model [3].

$$\dot{\mathbf{x}} = \mathbf{A}\mathbf{x} + \mathbf{B}\mathbf{u}$$
$$\mathbf{y} = \mathbf{C}\mathbf{x} + \mathbf{D}\mathbf{u} \qquad (12)$$

where,

$$\mathbf{A} = \begin{bmatrix} -\frac{\beta}{\lambda} & \frac{\beta}{\lambda} & \frac{n_r\alpha_f}{\Lambda} & \frac{n_r\alpha_c}{2\Lambda} & \frac{n_r}{\Lambda} \\ \lambda & -\lambda & 0 & 0 & 0 \\ \frac{f_f P_{0a}}{\mu_f} & 0 & \frac{-\Omega}{\mu_f} & \frac{\Omega}{2\mu_f} & 0 \\ \frac{(1-f_f)P_{0a}}{\mu_c} & 0 & \frac{\Omega}{\mu_c} & \frac{-(2M+\Omega)}{2\mu_c} & 0 \\ 0 & 0 & 0 & 0 & 0 \end{bmatrix}$$

$$\mathbf{B} = [0 \quad 0 \quad 0 \quad 0 \quad \mathbf{G_r}]^{\mathbf{T}}$$

$$\mathbf{C} = [1 \quad 0 \quad 0 \quad 0 \quad 0 \quad 0]$$

$$\mathbf{D} = [0]$$

$$\mathbf{x} = [\delta\mathbf{n_r} \quad \delta\mathbf{C_r} \quad \delta\mathbf{T_f} \quad \delta\mathbf{T_l} \quad \delta\rho_\mathbf{r}]$$

$$\mathbf{y} = [\delta n_r] \quad ; \quad \mathbf{u} = [z_r]$$

The symbol δ indicates the deviation of a variable from an equilibrium value; e.g., $\delta n_r(t) = n_r(t) - n_{r0}$ with $n_{r0} \equiv$ the nominal value of n_r at the equilibrium condition.

The values of the constants used for controller design and simulations in this paper are summarized in Table I. These parameters are representative of a Three Mile Island-Type reactor at the middle of the fuel cycle.

[Downloaded from necjournals.ir on 2026-11-26]

TABLE 1- Parameters for ROGSC Design at the Middle of the Fuel Cycle of a TMI-Type PWR

$\beta = 0.006019$	$\lambda = 0.150 \quad s^{-1}$
$\Lambda = 0.00002 \quad \text{sec}$	$f_f = 0.92$
$P_{0a} = 2500 \quad MW$	$T_e = 290 \quad ^\circ C$
$\mu_f = 26.3 \quad MW.s/^\circ C$	$T_{f0} = 700 \quad ^\circ C$
$G_r = 0.0145 \quad \Delta k/k$	$T_{c0} = 305 \quad ^\circ C$

Also $\mu_c, \Omega, M, \alpha_f$ and α_c are not constant but rather a function of the power level n_r as follows:

(13a) $$\mu_c(n_r) = \left(\frac{160}{9} n_r + 54.022\right) \quad MW.s/^\circ C$$

(13b) $$\Omega(n_r) = \left(\frac{5}{3} n_r + 4.933\right) \quad MW/^\circ C$$

(13c) $$\mathrm{M(n_r) = (28.0n_r + 74.0)} \quad \mathrm{MW/^\circ C}$$

(13d) $$\alpha_f(n_r) = (n_r - 4.24) \times 10^{-5} \quad \frac{\delta k}{k}/^\circ C$$

(13e) $$\alpha_c(n_r) = (-4.0 n_r - 17.3) \times 10^{-5} \quad \frac{\delta k}{k}/^\circ C$$

Moreover parameters of matrix **A** [Eq (12)], the linearized state space representation of reactor equation about nominal power level n_r, depends on power level n_r.

3- Robust Optimal Gain Scheduling Controller (ROGSC)

Gain scheduling controller is one of the methods for controlling systems with varying parameters [6]. Block diagram of a gain scheduling controller is shown in fig 1. Here adaptation is done by scheduling mechanism. This is done by measuring output of the process (here relative power).

One of the main advantages of this method is the fast response of the control system to variation of the process parameters.

In the proposed method, optimal control theory and LQR method is used as the control design

method. Fig 2. shows the configuration of a gain scheduling controller for controlling power level of nuclear reactors.

[Downloaded from necjournals.ir on 2026-11-26]

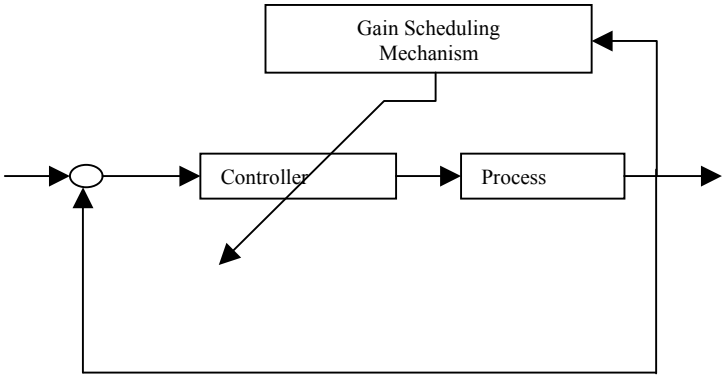

Figure 1- Configuration of Gain Scheduling Controller

Linear quadratic regulator method of MATLAB [7] (lqr command) is used for finding variable optimal feedback gains at every instant. Here variation of reactor parameters is known Eq (13). What should be done is calculating these variable parameters in every power level at which the reactor works, and based on these parameters the optimal feedback gains will be computed by LQR method. The varying parameters as well as varying optimal feedback gains will be implemented in the simulation simultaneously and in real time with the aid of a S-function written for the simulink simulation software.

State Estimator

LQR design method produces a gain vector to multiply each of the system states. In real world every state of a system is not measurable. That is why state estimators are used to estimate states instead of measuring them. In our system the states are: relative neutron density, relative neutron precursor density, lumped fuel temperature, temperature of the water leaving the reactor and reactivity inserted by control rod as is indicated by Eq.(12). From these states relative neutron precursor and lump fuel temperature do not lend themselves to any direct measuring techniques. That is why we have used a linear deterministic state estimator.

[Downloaded from necjournals.ir on 2026-11-26]

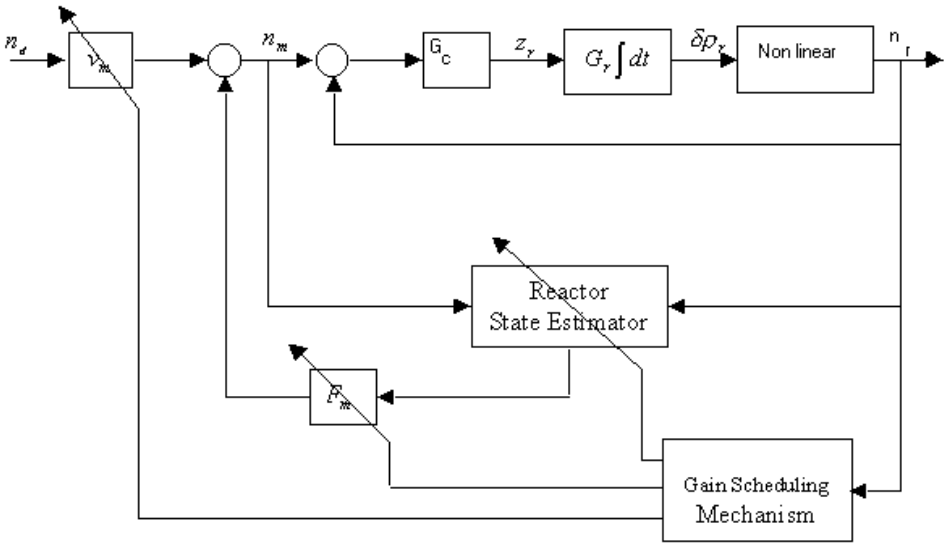

Figure 2- Configuration of the Robust Optimal Gain Scheduling Controller

The block labeled "Reactor State Estimator" in fig 2. is in fact a linear state space simulation model of the plant. This Luenberger observer uses both the input and output of the plant to estimate the 5 states of the plant[2].

As mentioned before the gain scheduling controller has been used in a SFAC configuration. The scheduling mechanism must assign 11 gains at each instant. These gains are:

F_m (5×1) feedback gain vector

L_m (5×1) observer gain vector

v_m feed forward scalar gain

The gain scheduling mechanism box in fig. 2. has the responsibility for updating these 11 gains at every instant based on the relative power magnitude.

The simulation of the plant and the control system has been done by MATLAB/SIMULINK

4- Simulation Results

Simulation results for the most stressed operation of reactor is shown in Fig 3. In the simulation, the system was operating at full power of 100%, and the input demand signal to the system is a large step change of power from 100% to 25%. For there cases a) ROGSC, b)Fixed optimal control (with fixed parameters of the plant)[4], and c) Fixed optimal control (with considering the plant parameter variations) results show improved response of ROGSC over that of fixed optimal control. Fig 3. shows when the variations of the parameters of the plant are considered (case c) there will be a steady state error in reactor relative power and therefore, the response is not acceptable.

[Downloaded from necjournals.ir on 2026-11-26]

5- Conclusions

The design, simulation, and evaluation of a Robust Optimal Gain Scheduling Controller for improving reactor control performance for a wide range of reactor operation and it's superiority over Fixed Optimal Control has been demonstrated.

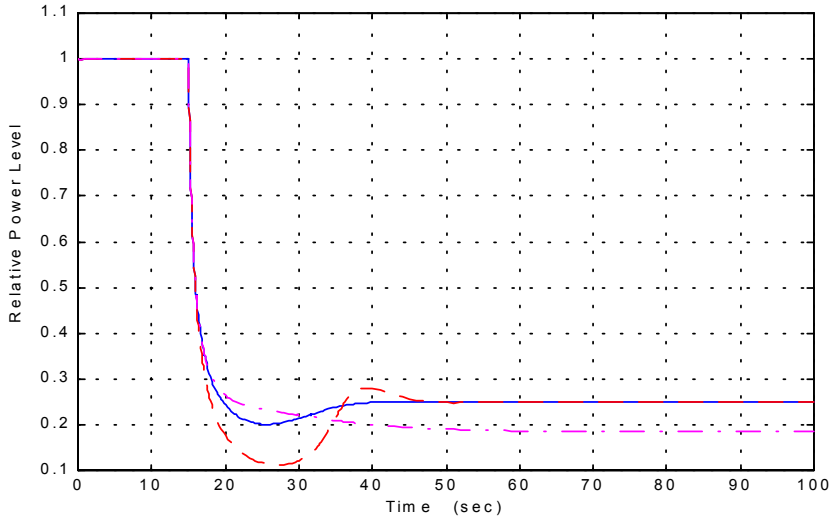

Figure 3- Emergency operation 100% to 25% power level Change
a) ROSTR(solid)
b) Fixed Optimal Fixed Parameters(dashed)
c) Fixed Optimal Changing Parameters (dashdot)

For future research work, implementation of a fuzzy controller with ROGSC as the reference model is under development. By doing so the computational requirements of ROGSC can be reduced drastically, and robustness of the controller to process and measurement noise can be attained.

Furthermore, in developing ROGSC we assumed the known dependence of reactor parameters to relative power [4], by using one of the parameter estimation schemes we can relax this assumption as well.

[Downloaded from necjournals.ir on 2026-11-26]

References

1- H. L. Akin and V. Altin, " Rule – based fuzzy logic controller for a PWR Type nuclear Power Plant ", IEEE Trans. Nucl . Sci , vol . 38 no.2, Apr 1991.

2- R.M.Edwards, K. Y. Lee, and M.A.Schultz, "State feedback assisted classical control: An incremental approach to control modernization of existing and future nuclear reactors and power plants ", Nucl. Technol . vol . 92 , Nov ., pp. 167 – 185 , 1990.

3- R.M.Edwards, K. Y. Lee, and A. Ray, "Robust optimal control of nuclear reactors and power plants "Nucl. Technol . vol . 98 May, pp 137 – 148. 1992.

4- Pramath Ramaswamy, Robert M. Edwards, and Kwang Y. Lee " An Automatic Tunning Method of fuzzy logic controller for Nuclear Reactors ", IEEE Trans. Nucl . Sci , vol . 40 Agust 1993.

5- M. A. Schultz, Control of Nuclear Reactors and Power Plants, 2nd ed., McGraw-Hill Book Company, New York (1961).

6- KARL J. ASTROM and BJORN WITTENMARK, Computer Controlled Systems, Prentice – Hall Inc. Englewood Cliffs (1984).

7- "PC – MATLAB," The Math Works, Sherborn, Massachusetts (2002)

[Downloaded from necjournals.ir on 2026-11-26]